Dimension Drawing - Multi RS	
PMR482602000	Multi RS Solar

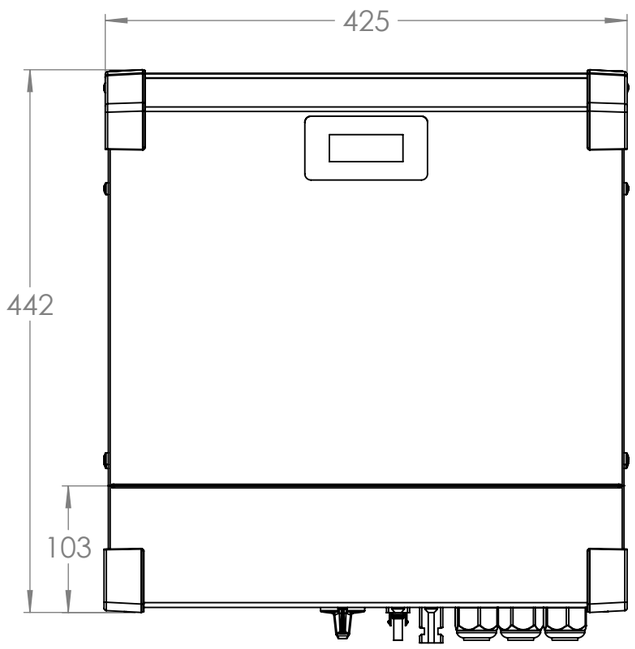

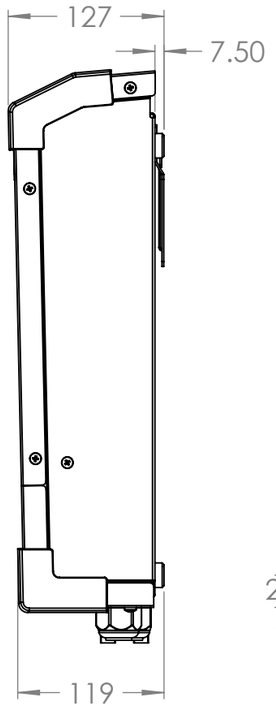

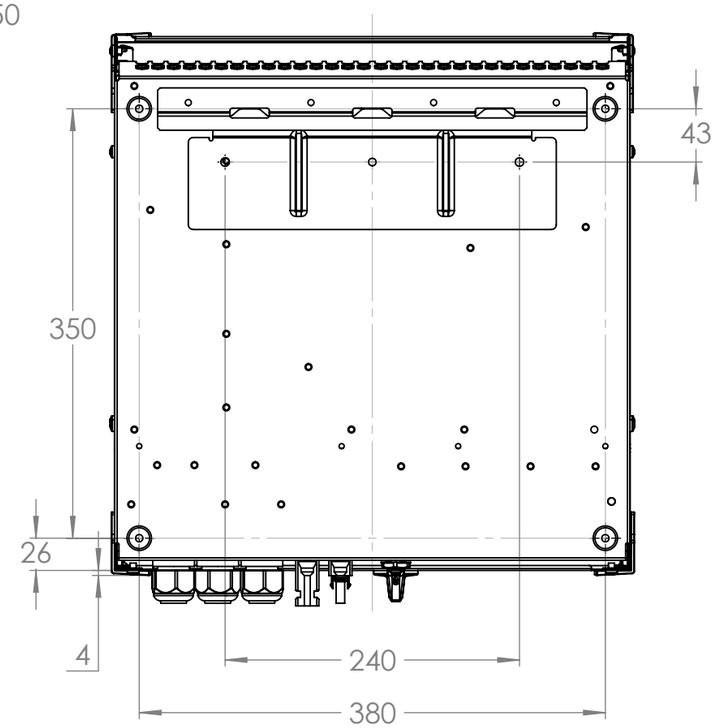

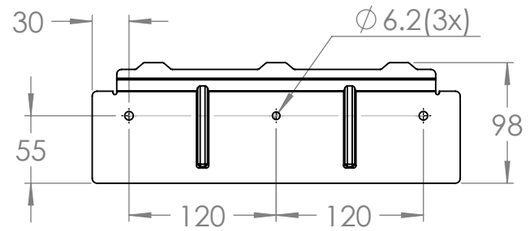

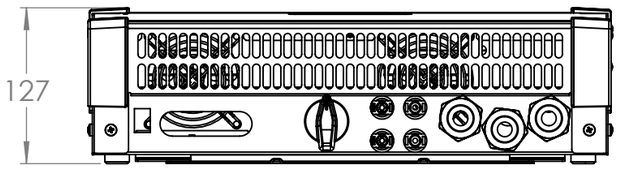

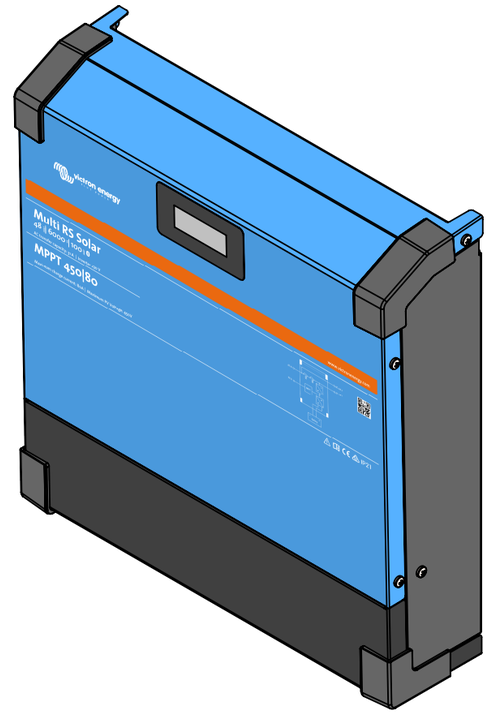

Dimensions in mm

victron energy
BLUE POWER

Rev00